ELCOT Single Ended

12V Heated Towel Rail

Installation Guide

TOWELRADS.COM

Contents

What's in the box? 3

Before you start 4

Installing ELCOT 5

Wiring diagram 7

Installation diagram 12

Technical data 13

Contact information 16

What's in the box?

Check you've got everything:

- ELCOT Single Ended 12V
- Dress ring
- ELCOT connection wire (2m)
- Mounting spigot and 2 fixing screws
- Allen key and 2 grub screws
- Locktite adhesive

You will also need:

- Cross head screwdriver
- Cordless drill
- 12V transformer
- Spirit level
- Pencil
- Electrical supply

ELCOT Single Ended 12V should be:

- Installed on an RCD protected circuit
- Connected to a suitably rated 12V transformer
- Installed by a qualified professional electrician, in line with current electrical regulations and local standards. (For the UK: IEE 17th Edition Part P)
- This product is designed to hold towels and should not be subjected to weight or pressure in excess of 5kg
- Connected in parallel if installing multiple rails

1. Switch off mains power

You will be installing ELCOT as part of a high voltage mains electrical circuit. To ensure your safety and to protect the ELCOT switch off the mains power before you start the installation.

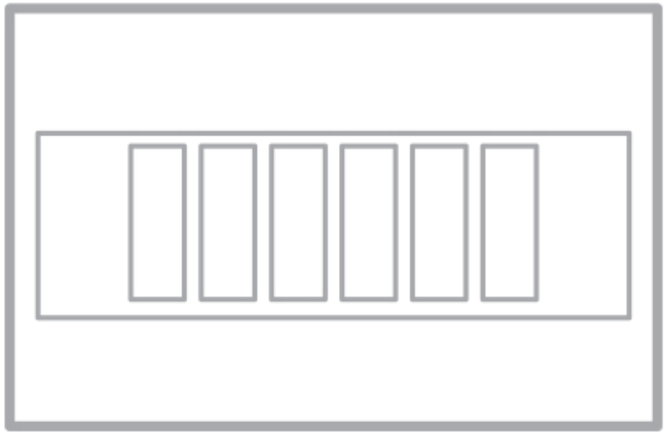

Fuse Box

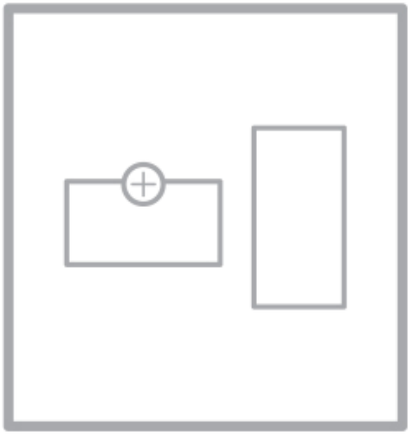

Fused Switch

2. Choose a location

Decide where the rail is to be fixed to the wall and drill into the wall taking care to avoid any existing pipe work or electric cables.

The 2m connection cable can then be fed through a conduit in the wall cavity or chased into a channel cut into a solid wall.

Then connect the cable to the transformer and electric circuit, above the ceiling or in the wall cavity behind a thermostat, timer or access plate.

3. Electrical connections

Ensure the electricity is switched off.

Connect the 12V transformer and towel rail to the electrical supply as shown in the diagram. Multiple rails should be wired in parallel.

4. Wiring diagram

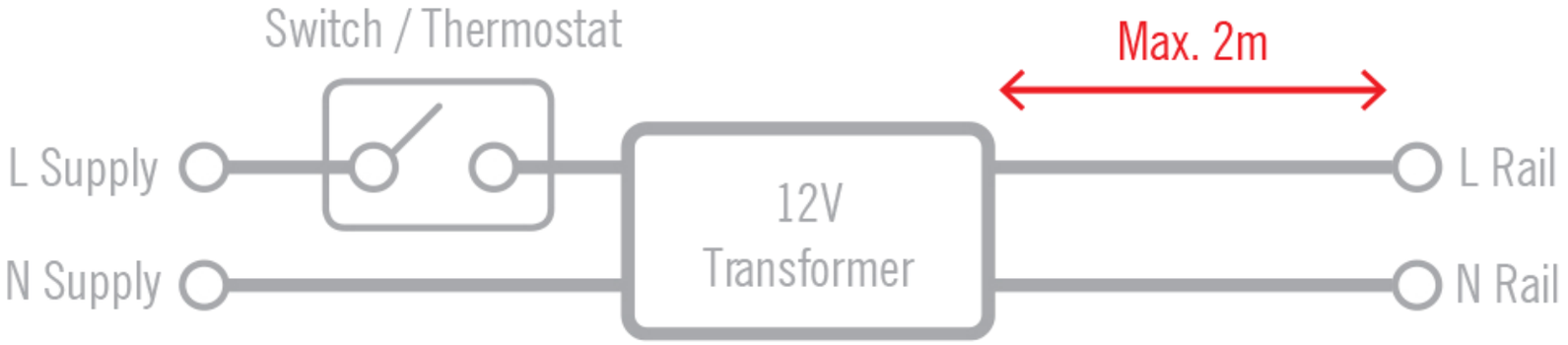

5. Fix to the wall

Pull the electrical connector through the centre of the mounting spigot and use a pencil to mark the wall ready to drill the fixing holes for the mount.

Carefully drill fixing holes, insert suitable wall pugs and fix the spigot in place with the screws provided.

Installing multiple rails?

Use the ELCOT mounting system (7060 SRMS) and consult the relevant installation guide.

6. Tile the wall

At this stage the wall should be tiled. The mounting spigot is designed to be encapsulated within the tile adhesive layer.

Cut the tile or use a 24mm tile drill bit to make a hole for the mounting spigot.

A full bed of tile adhesive should be used to cover the mounting spigot and fixing screws.

7. Connection clips

When the tile adhesive is set and the tiles have been grouted, the towel rail can be fixed in position.

The optional dress ring should be installed and then the electrical clips can be connected by any competent individual. Any excess cable should be fed into the wall cavity.

Make sure the clips are connected securely before you proceed.

8. Fix ELCOT in position

Loosen the grub screw on the towel rail and apply the provided adhesive to the mounting spigot.

Fit the towel rail over the spigot and use a spirit level to check the rail is straight.

Fix in position by tightening the grub screw with the allen key provided.

The locktite adhesive will be permanently set after 2 hours. Make sure you have the rail installed in the final position before applying adhesive.

Installation diagram

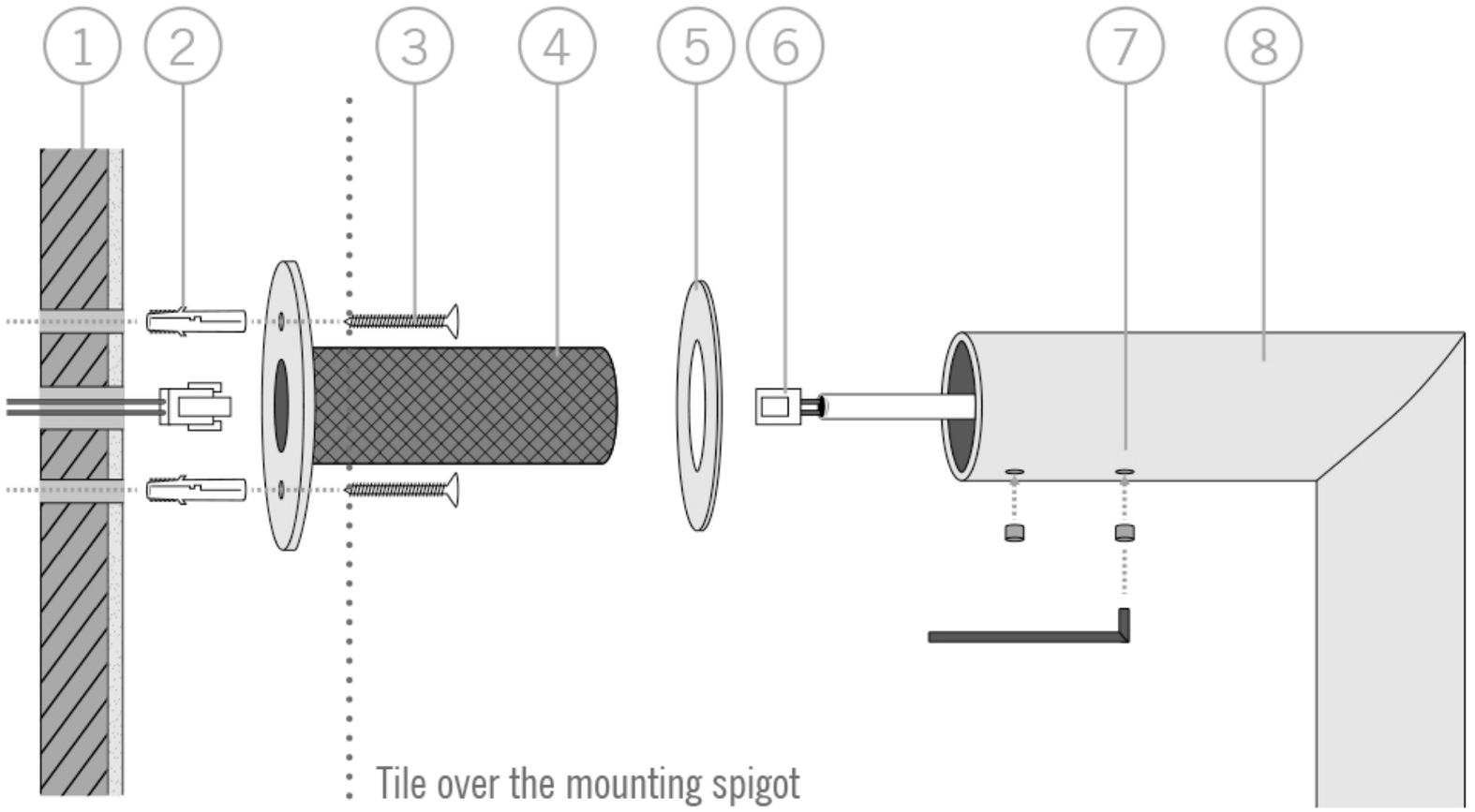

1. Wall
2. Suitable wall plug
3. Fixing screw
4. Mounting spigot
5. Dress ring (optional)
6. Connection clip
7. Grub screw
8. Towel rail

Technical information

128066	L400 x H32 x D100	17W
128067	L600 x H32 x D100	18W
128068	L400 x H32 x D100	17W
128069	L600 x H32 x D100	18W

Supply voltage	230V 50/60Hz
Transformer voltage	12V

ELCOT Single Ended Rails 12V

Electric heated towel rails safe for use in wet locations

What's in the box?

1x ELCOT
1x fixing spigot
1x allen key
1x adhesive
1x dress ring

What else do I need?

A 12V transformer(s) suitably rated for the combined output of your rails
ELCOT mounting system (7060) for easy installation of multiple rails

ELCOT Mounting System (7060) can be used for installation of multiple Single Ended and Single Bar 12V towel rails

ELCOT Single Ended Rails 12V

Electric heated towel rails safe for use in wet locations

What's in the box?

1x ELCOT
1x fixing spigot
1x allen key
1x adhesive
1x dress ring

What else do I need?

A 12V transformer(s) suitably rated for the combined output of your rails

ELCOT mounting system (7060) for easy installation of multiple rails

ELCOT Mounting System (7060) can be used for installation of multiple Single Ended and Single Bar 12V towel rails

ELCOT Mounting System

Technical Data

Electric connection cables can be run behind the mounting rail for simple connection

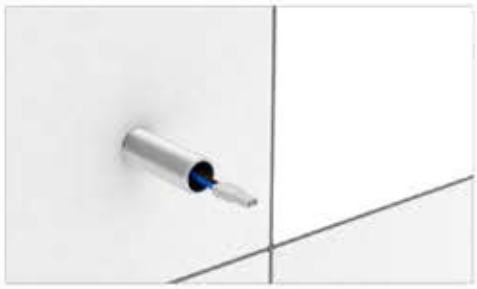

All electrical connections can be made before fully leaving the installer to simply connect the plugs and fix the rail to the spigot

Technical Data

DATA	VALUE
Dimensions (mm)	1000 x 180 x 12
Materials	304 Stainless Steel

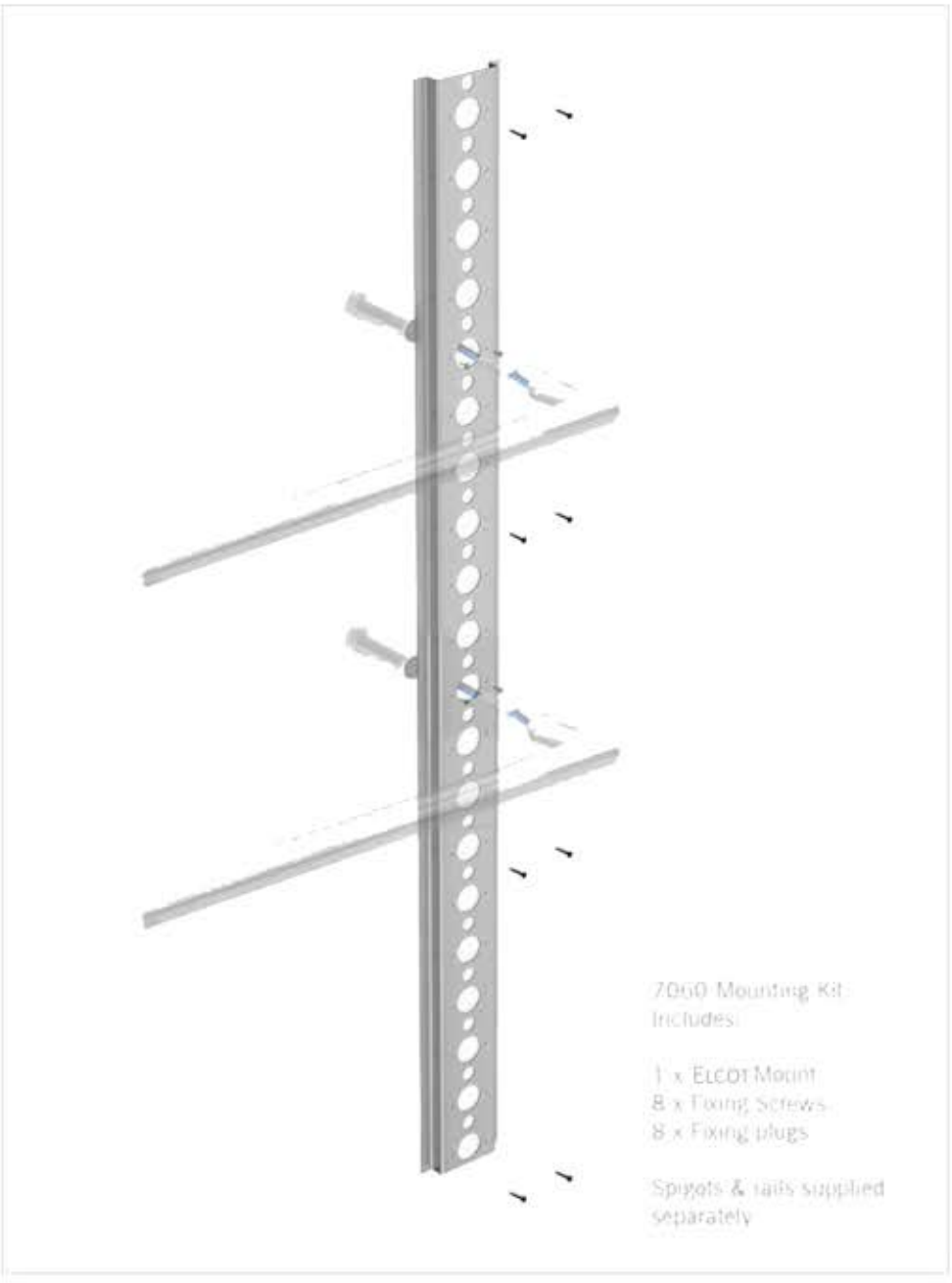

7060 Mounting Kit Includes:

1 x ELCOT Mount
8 x Fixing Screws
8 x Fixing plugs

Spigots & rails supplied separately

ELCOT Mounting System can be used for multirail installation of both our Single Ended and Single Bar 12V towel rails

ELCOT Mounting System

Installation Guide

Check you've got everything:

- 1 x ELCOT System
- 8 x Fixing screws
- 8 x Fixing plugs

You will also need:

- Combi drill or screwdriver
- Tiling materials
- Pencil & spirit level
- Reinforcing mesh tape
- ELCOT towel rail(s)

Choose a suitable area, measure and mark a vertical installation line.

Fix the spigot that came with your ELCOT(s) to the mounting rail
2a) Single Ended Rails with 1 mounting point,
2b) Single Bar Rails with 2 mounting points.

Fix the mounting rail to the wall using the screws and fixing plugs provided.
You may need to use different fixings if required for your particular wall type.

Run the ELCOT connection cable(s) that came with your rails, in the cable void created by the mount, and into the ceiling cavity. Consult ELCOT guide for wiring diagrams.

Install 12mm tile backer boards flush with the front of the mount. Cover the mount with mesh reinforcing tape to aid the tile adhesive bond.

Apply tiles to the wall leaving the mounting spigot and connection cables exposed. Install ELCOT(s) in line with the relevant installation guide.

IMPORTANT: Consult the installation guide that comes with your ELCOT(s) to complete the installation of your towel rail(s).

SIDE ELEVATION

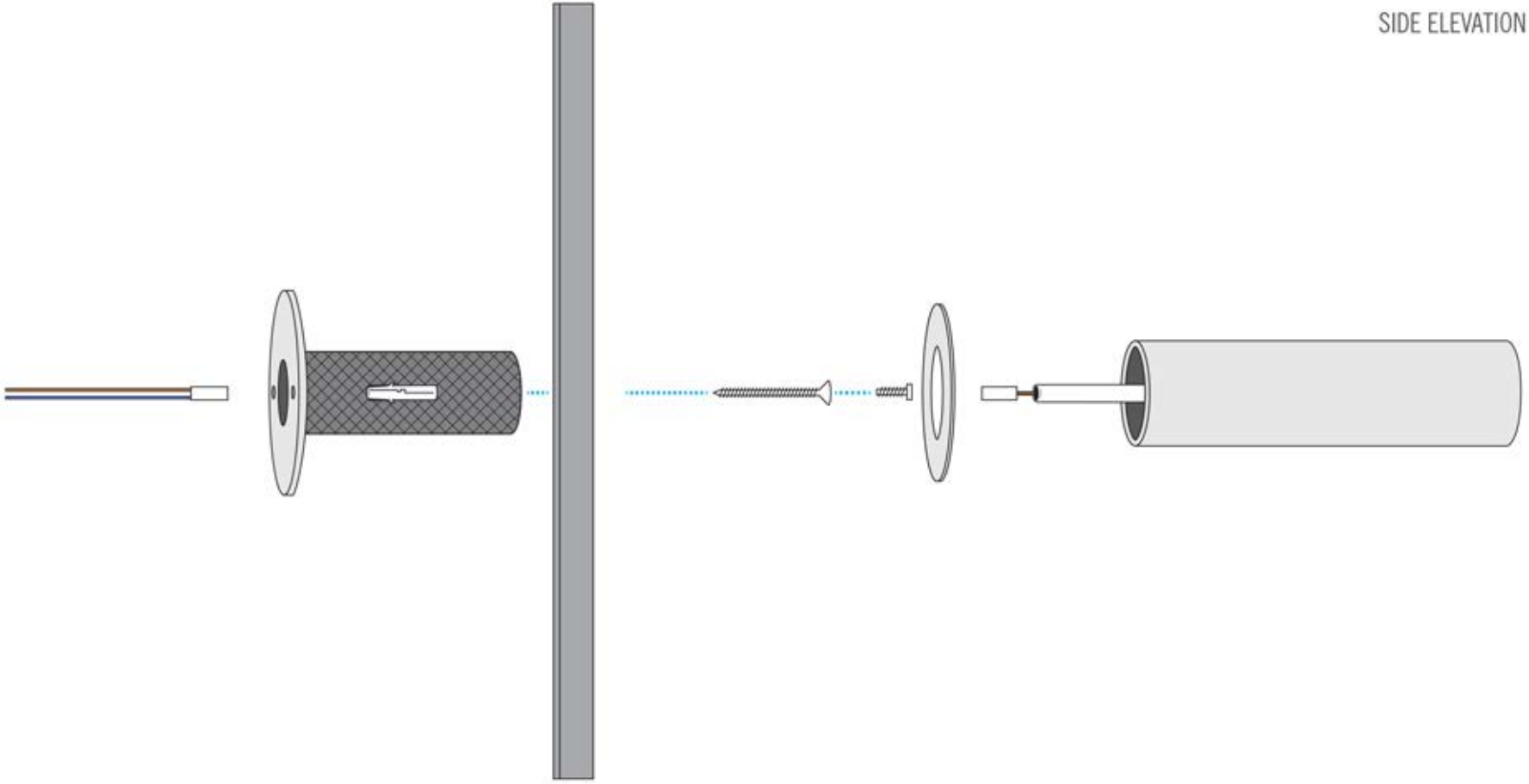
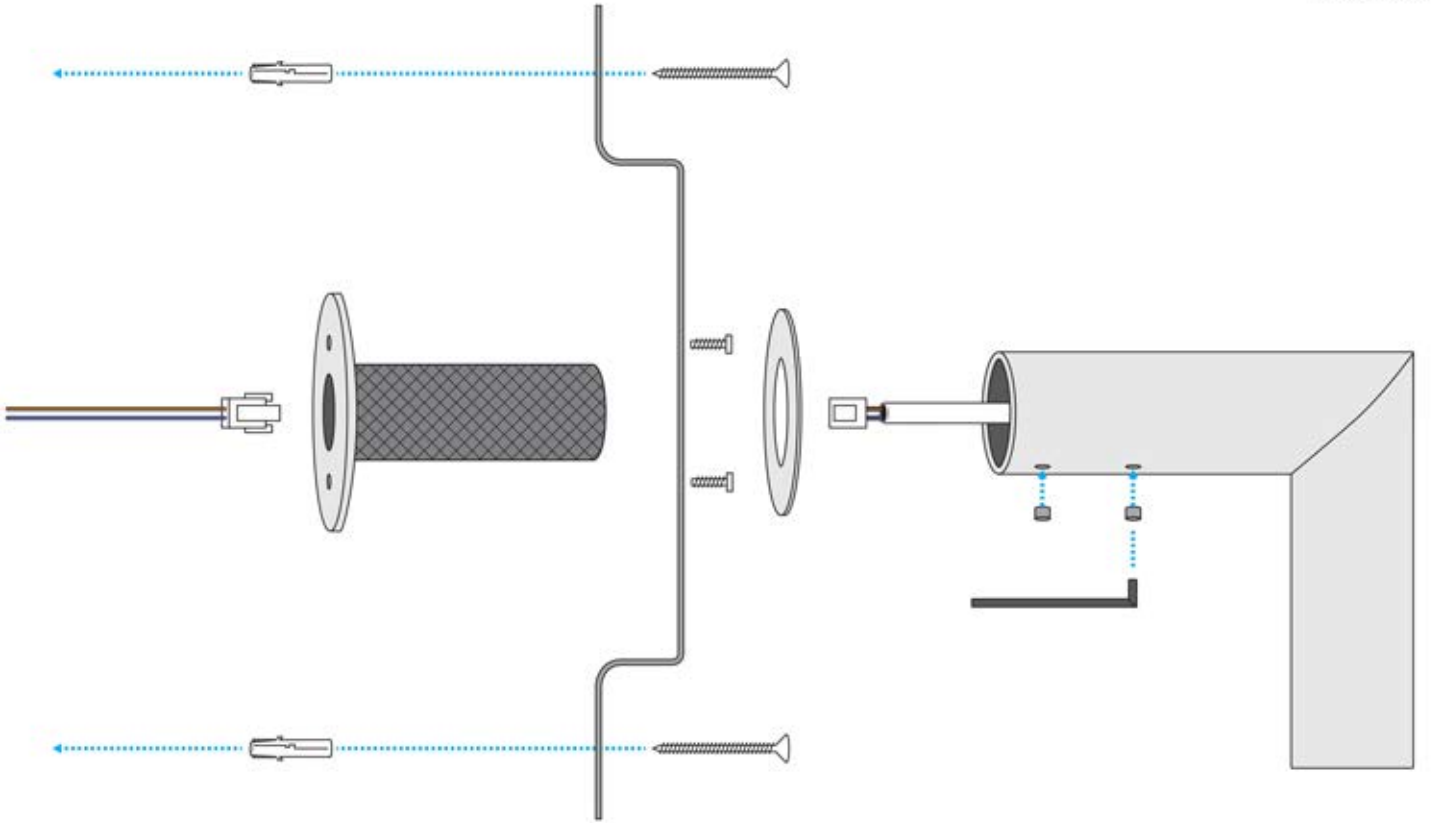
PLAN VIEW